Cambridge Assessment International Education

Cambridge International AS & A Level

CANDIDATE NAME									
CENTRE NUMBER						CANDIDATE NUMBER				

2431461584

PHYSICS **9702/31**

Paper 3 Advanced Practical Skills 1 **October/November 2023**

2 hours

You must answer on the question paper.

You will need: The materials and apparatus listed in the confidential instructions

INSTRUCTIONS

- Answer **all** questions.
- Use a black or dark blue pen. You may use an HB pencil for any diagrams or graphs.
- Write your name, centre number and candidate number in the boxes at the top of the page.
- Write your answer to each question in the space provided.
- Do **not** use an erasable pen or correction fluid.
- Do **not** write on any bar codes.
- You will be allowed to work with the apparatus for a maximum of 1 hour for each question.
- You should record all your observations in the spaces provided in the question paper as soon as these observations are made.
- You may use a calculator.
- You should show all your working and use appropriate units.

INFORMATION

- The total mark for this paper is 40.
- The number of marks for each question or part question is shown in brackets [ ].

For Examiner's Use	
1	
2	
Total	

This document has **12** pages. Any blank pages are indicated.

© UCLES 2023

BLANK PAGE

You may not need to use all of the materials provided.

1 In this experiment, you will investigate an electric circuit.

You have been provided with a wooden strip with wire attached to nails.

(a) ● Set up the circuit shown in Fig. 1.1.

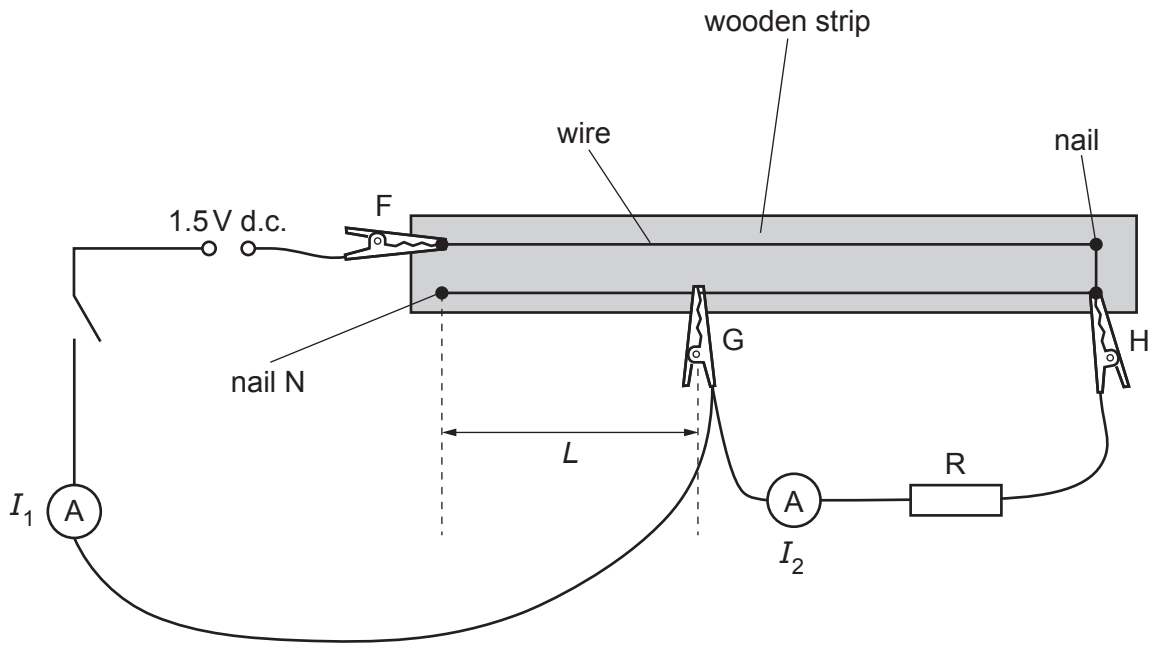

Fig. 1.1

- F, G and H are crocodile clips.

  The distance between nail N and G is *L*, as shown in Fig. 1.1.

  Adjust the position of G until *L* is approximately 40 cm.

- Close the switch.

- Record *L* and the ammeter readings I_1 and I_2.

L = ...

I_1 = ...

I_2 = ...

- Open the switch.

[3]

(b) Change *L* by adjusting the position of G between N and H. Measure and record *L*, I_1 and I_2. Repeat until you have six sets of values of *L*, I_1 and I_2.

Record your results in a table. Include values of $\frac{I_2}{(I_1 - I_2)}$ in your table.

[9]

(c) **(i)** Plot a graph of $\frac{I_2}{(I_1 - I_2)}$ on the *y*-axis against *L* on the *x*-axis. [3]

(ii) Draw the straight line of best fit. [1]

(iii) Determine the gradient and *y*-intercept of this line.

gradient = ...

y-intercept = ...

[2]

© UCLES 2023

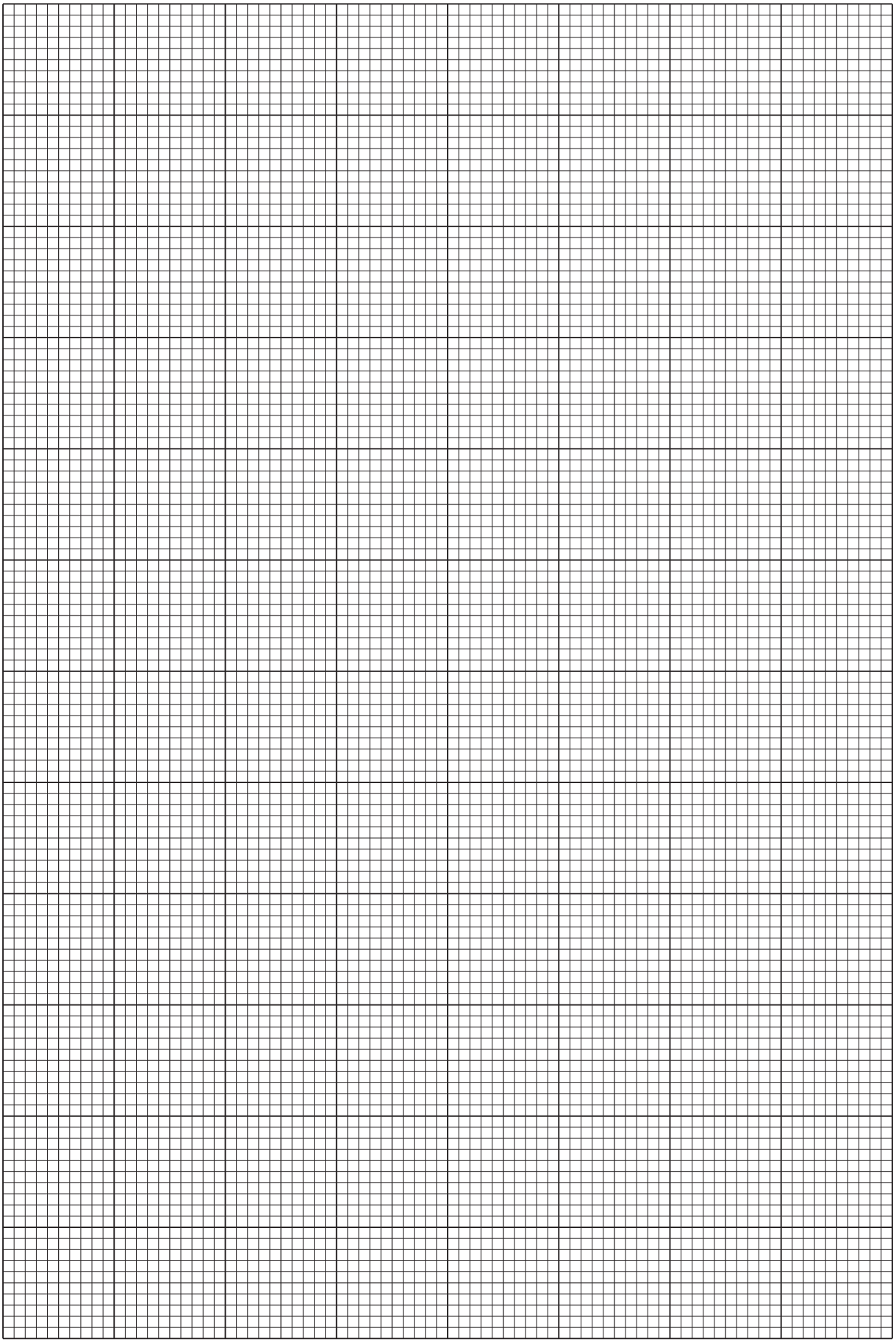

(d) It is suggested that the quantities L, I_1 and I_2 are related by the equation

$$\frac{I_2}{(I_1 - I_2)} = PL + Q$$

where P and Q are constants.

Using your answers in **(c)(iii)**, determine the values of P and Q.
Give appropriate units.

P = ...

Q = ...
[2]

[Total: 20]

You may not need to use all of the materials provided.

2 In this experiment, you will investigate the displacement of water from a container.

(a) (i) The apparatus has been set up as shown in Fig. 2.1.

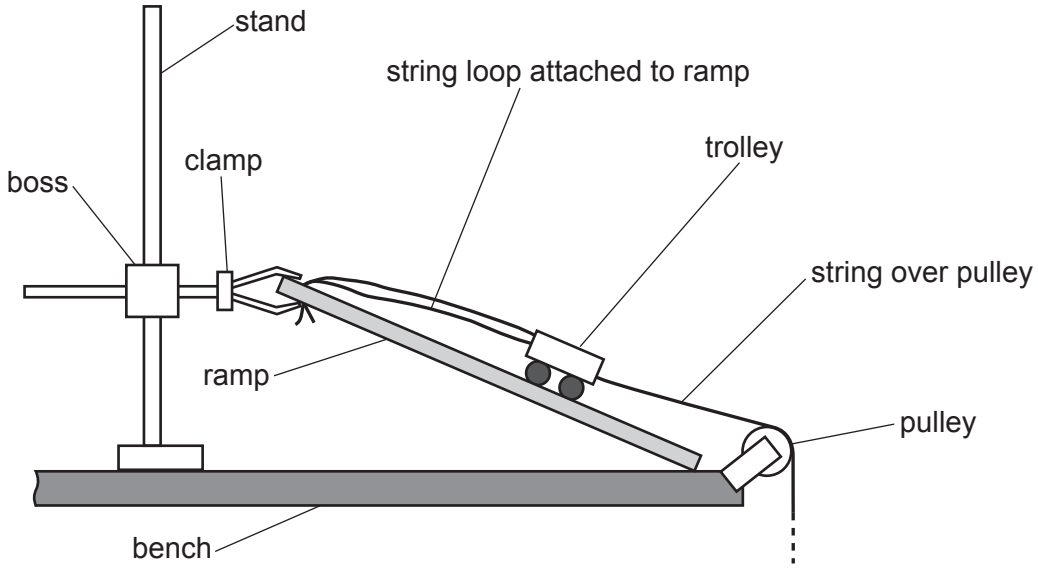

Fig. 2.1

- Ensure that the string passes over the pulley as shown in Fig. 2.1.
- Hang the mass hanger and four slotted masses from the small string loop, as shown in Fig. 2.2.

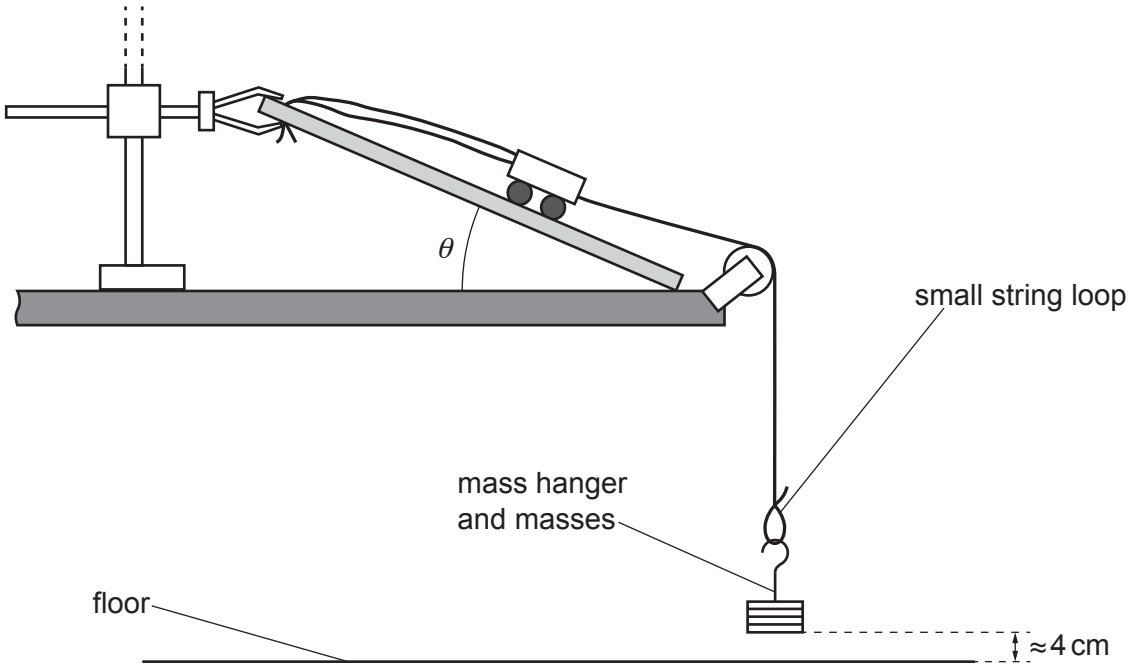

Fig. 2.2

- Adjust the apparatus until the bottom of the masses is approximately 4 cm above the floor.

- Place the two containers so that the mass hanger and masses hang inside the smaller container, as shown in Fig. 2.3.

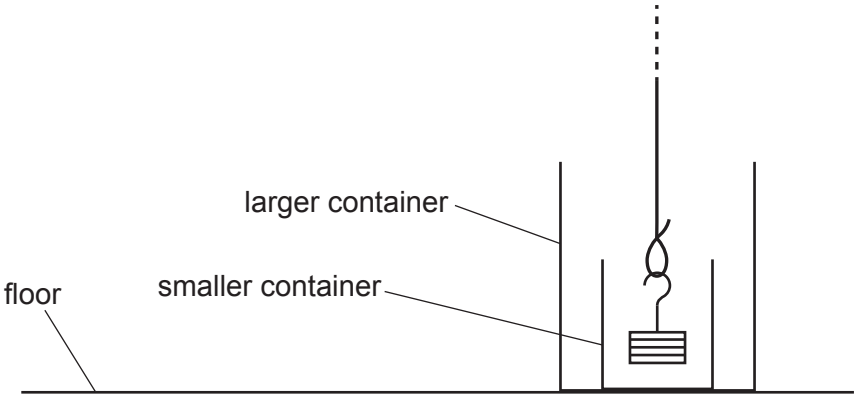

Fig. 2.3

- Pull the trolley up the ramp. Ensure that the string runs over the pulley, and the mass hanger and masses hang above the smaller container. Stop the trolley when its back wheels are approximately 10 cm from the top of the ramp or the small string loop touches the pulley.

- Release the trolley. Ensure that the mass hanger and the masses hang inside the smaller container when the trolley stops.

- Lift the string, mass hanger and masses onto the bench.

- The angle between the ramp and the bench is θ, as shown in Fig. 2.2.

  Adjust the apparatus until θ is between 10° and 15°.

- Measure and record θ.

θ = ... ° [2]

(ii) Calculate cos θ.

cos θ = ... [1]

(b) (i) ● Without spilling any water into the larger container, completely fill the smaller container with water, as shown in Fig. 2.4.

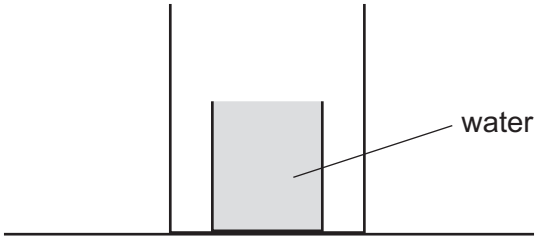

Fig. 2.4

- Hang the mass hanger and masses from the small string loop. Ensure that the string runs over the pulley, and the mass hanger and masses hang above the smaller container.
- Pull the trolley up the ramp. Stop the trolley when its back wheels are approximately 10 cm from the top of the ramp or the small string loop touches the pulley.
- Release the trolley. The masses will fall into the water and water will overflow into the larger container.
- Lift the string, mass hanger and masses onto the bench.
- Measure and record the volume V of water that is now in the larger container.

V = ... cm^3 [2]

(ii) Estimate the percentage uncertainty in your value of V. Show your working.

percentage uncertainty = ... % [1]

(c) ● Adjust the apparatus until θ is between 25° and 31°.

● Measure and record θ.

θ = ... °

● Repeat **(a)(ii)** and **(b)(i)**.

cos θ = ...

V = ... cm^3
[3]

(d) It is suggested that the relationship between V and θ is

$$V = \frac{k}{\cos \theta}$$

where k is a constant.

(i) Using your data, calculate two values of k.

first value of k = ...

second value of k = ...
[1]

(ii) Justify the number of significant figures that you have given for your values of k.

.....

.....

..... [1]

(e) It is suggested that the percentage uncertainty in the values of k is 15%.

Using this uncertainty, explain whether your results support the relationship in **(d)**.

.....

.....

.....

..... [1]

(f) (i) Describe **four** sources of uncertainty or limitations of the procedure for this experiment.

For any uncertainties in measurement that you describe, you should state the quantity being measured and a reason for the uncertainty.

1 .....

.....

2 .....

.....

3 .....

.....

4 .....

.....

[4]

(ii) Describe **four** improvements that could be made to this experiment. You may suggest the use of other apparatus or different procedures.

1 .....

.....

2 .....

.....

3 .....

.....

4 .....

.....

[4]

[Total: 20]

Permission to reproduce items where third-party owned material protected by copyright is included has been sought and cleared where possible. Every reasonable effort has been made by the publisher (UCLES) to trace copyright holders, but if any items requiring clearance have unwittingly been included, the publisher will be pleased to make amends at the earliest possible opportunity.

To avoid the issue of disclosure of answer-related information to candidates, all copyright acknowledgements are reproduced online in the Cambridge Assessment International Education Copyright Acknowledgements Booklet. This is produced for each series of examinations and is freely available to download at www.cambridgeinternational.org after the live examination series.

Cambridge Assessment International Education is part of Cambridge Assessment. Cambridge Assessment is the brand name of the University of Cambridge Local Examinations Syndicate (UCLES), which is a department of the University of Cambridge.